A (1 : 1)

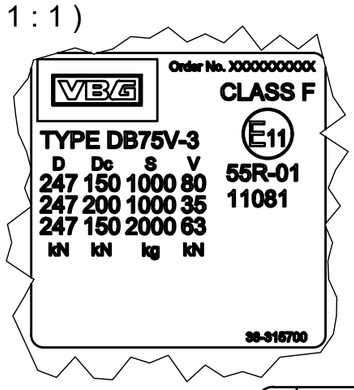

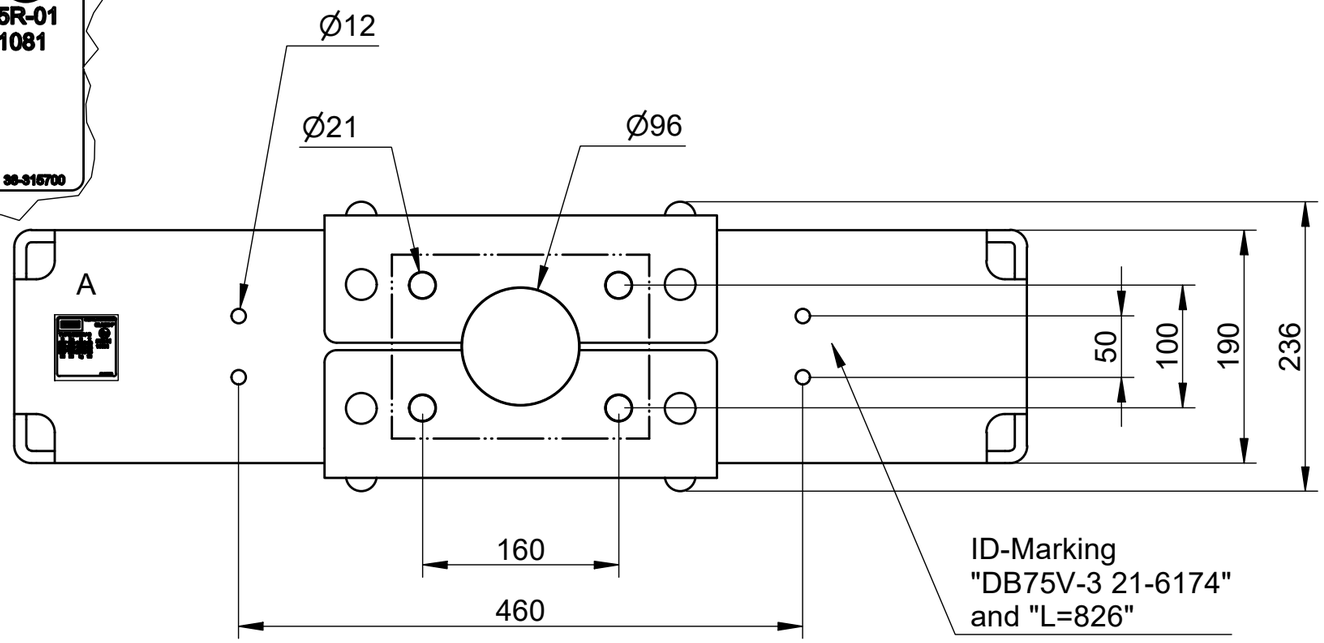

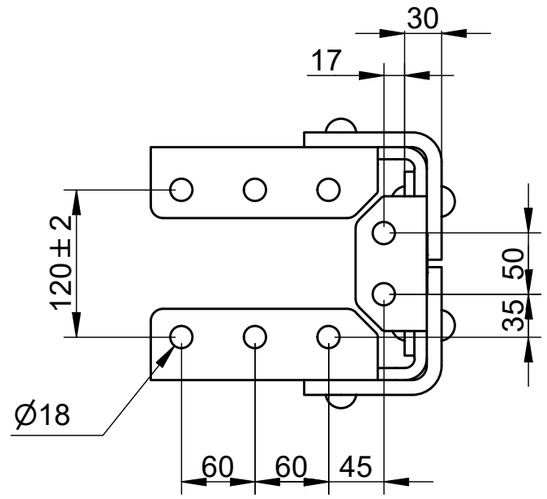

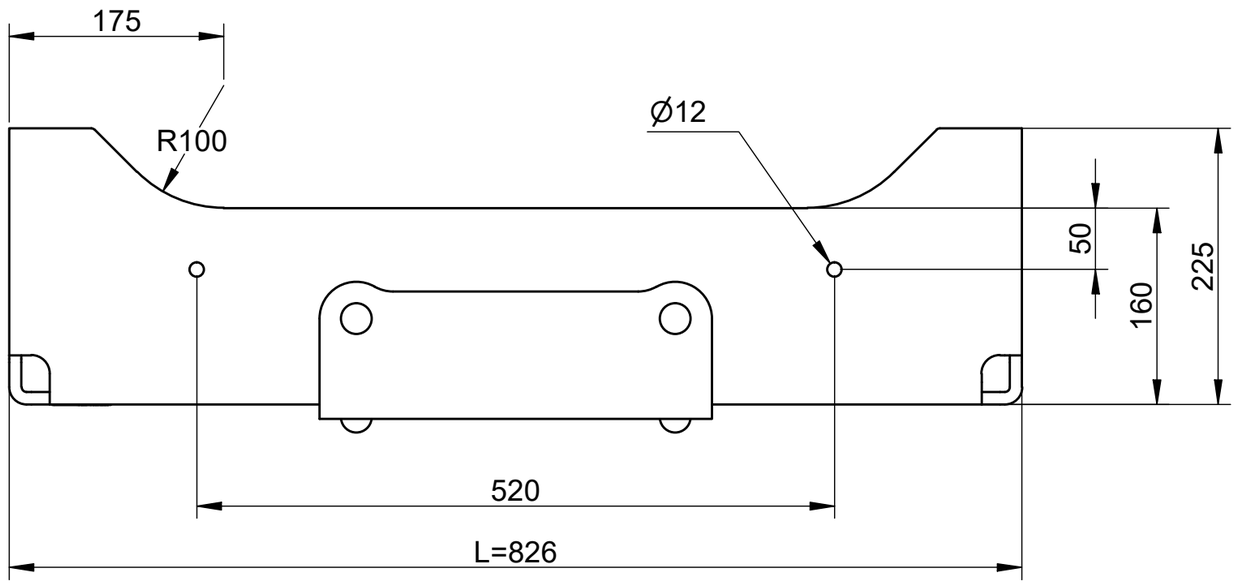

Dimensions for information only - do not scale

VBG GROUP	Modified Date 2024-02-22	Modified by JE	Modification No. 14003	Issue a
	3D Model No. 21-809500			Engineer SJ
Description DB75V-3, L=826	Sheet Size A3	Scale 1 : 5	Projection	Drafting Date 2017-03-27 / Drafted by SJ
	Stage P	Drawing No. 21-809500 (F) INFO		

This drawing is the property of VBG Group AB and is protected in accordence with prevailing law. Changes must be made in CAD-program, this concerns both 2D & 3D.

Released